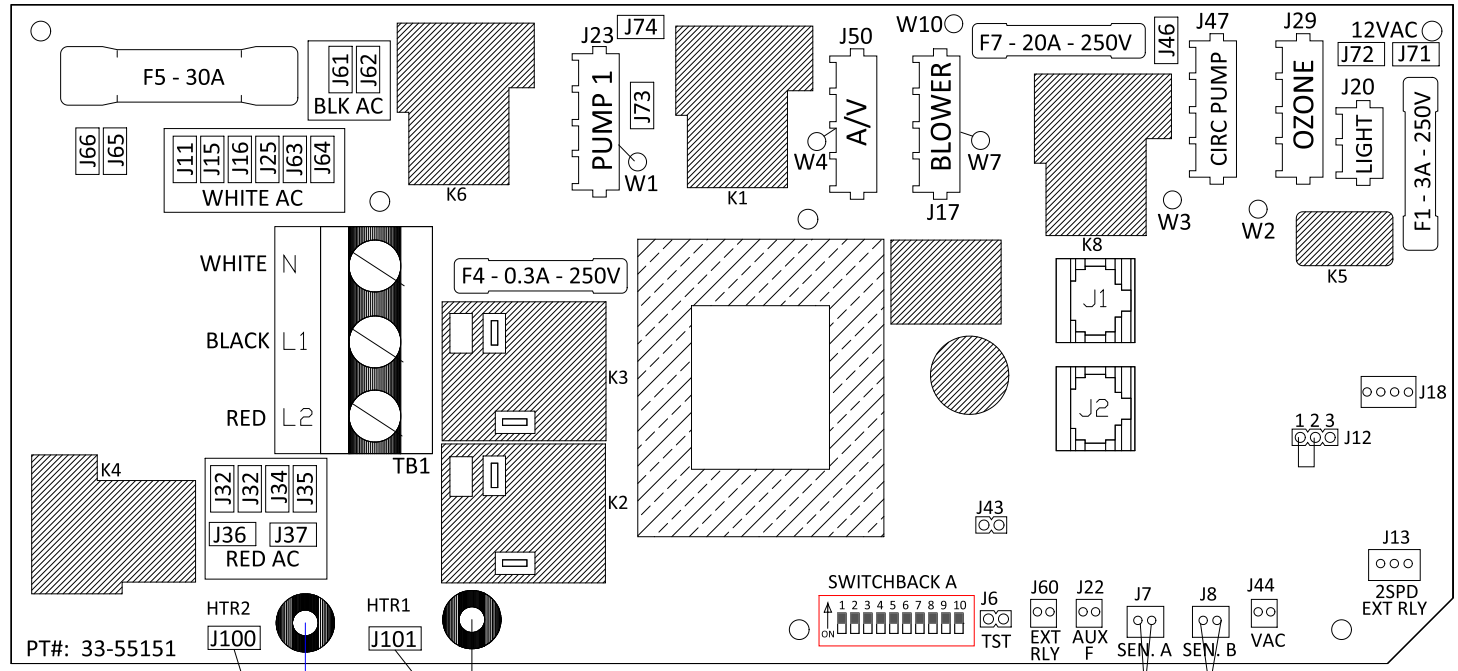

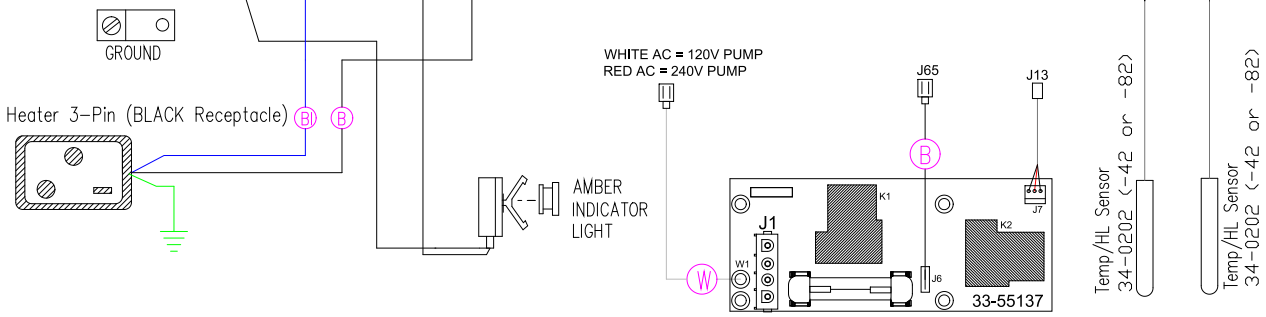

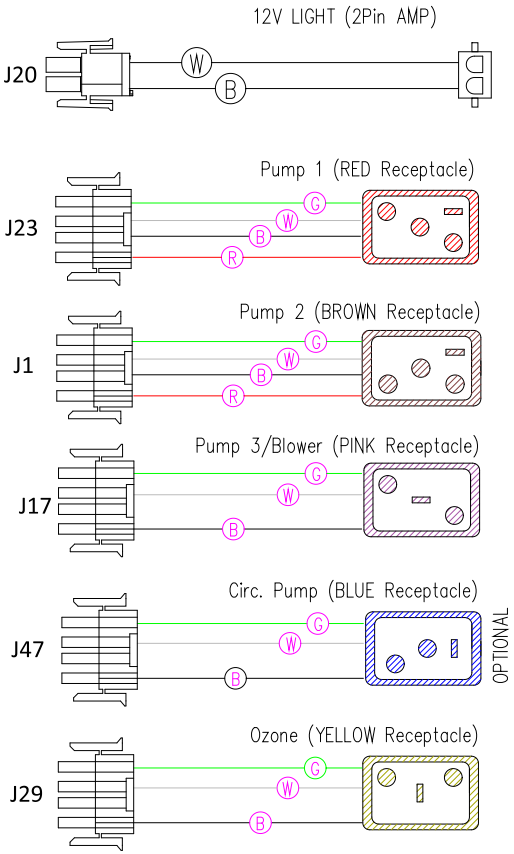

LEGEND	
□	– 1/4" QUICK CONNECT
⊟	– 1/4" QUICK CONNECT PIGGYBACK
⊞	– FORK CONNECTOR
○	– RING CONNECTOR
▭	– SOCKET CONNECTOR
△	– PIN CONNECTOR

HYDRO—QUIP
CORONA, CA (951) 273-7575

Manufacture Notes:

#1 Line 2 and Neutral need to be jumpered for 120V operation.

Drawn	Rev
MO	02
Date 11.11.15	
Diagram No. 9049	

Wire Color Code

B – Black	G – Green
Br – Brown	Bl – Blue
R – Red	V – Violet
O – Orange	W – White
Y – Yellow	Gr – Gray