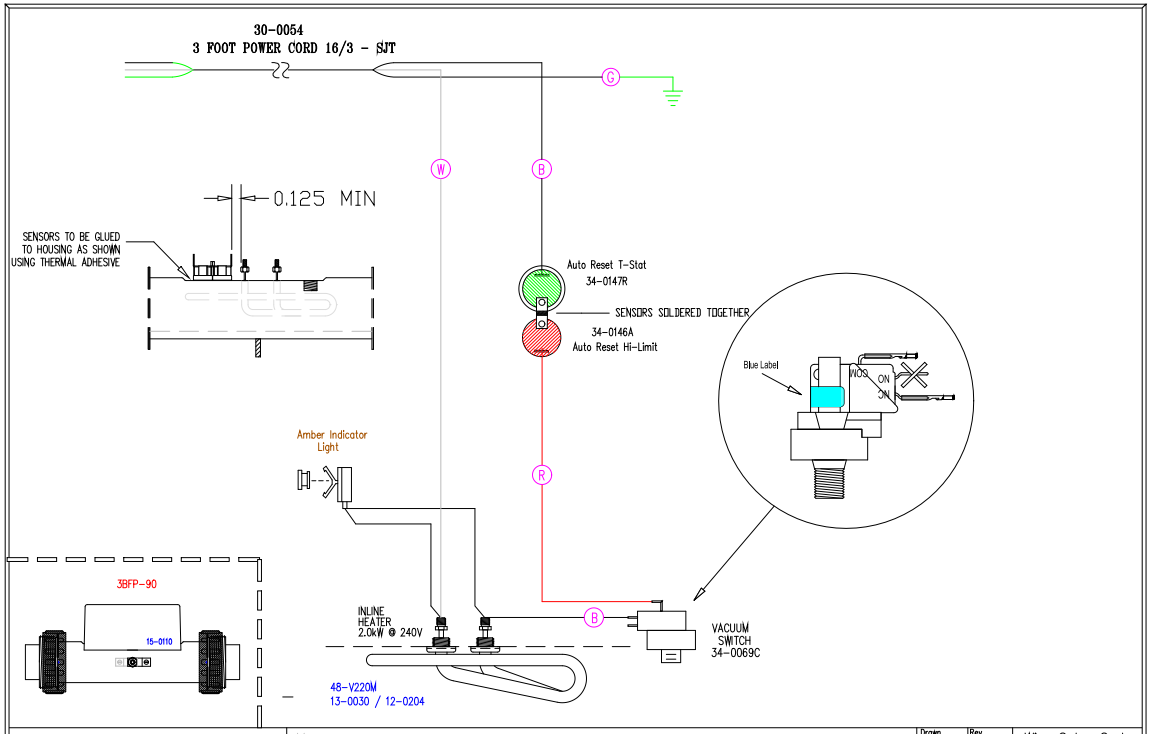

HYDRO-QUIP
CORONA, CA (951) 273-7575

Manufacture Notes:

Drawn	Rev
MBS	0
Date	07.03.07
Diagram No.	1365

Wire Color Code

B - Black	G - Green
Br - Brown	Bl - Blue
R - Red	V - Violet
O - Orange	W - White
Y - Yellow	Gr - Gray